ISSUE	REVISIONS	DRAWN	DATE
△			

CN1
PIN ASSIGNMENT

No.	SYMBOL	No.	SYMBOL
1	VL1	26	B1
2	NC	27	B0
3	VL2	28	DENA
4	VGL	29	DGND
5	VDDD	30	NC
6	DGND	31	DGND
7	NC	32	DCLK
8	DGND	33	DGND
9	HD	34	G5
10	U/L	35	G4
11	NC	36	G3
12	VGH	37	G2
13	VCOM	38	G1
14	DGND	39	G0
15	VD	40	DGND
16	DGND	41	R5
17	VDDA	42	R4
18	L/R	43	R3
19	RESET	44	R2
20	POL	45	R1
21	DGND	46	R0
22	B5	47	AGND
23	B4	48	NC
24	B3	49	DGND
25	B2	50	DGND

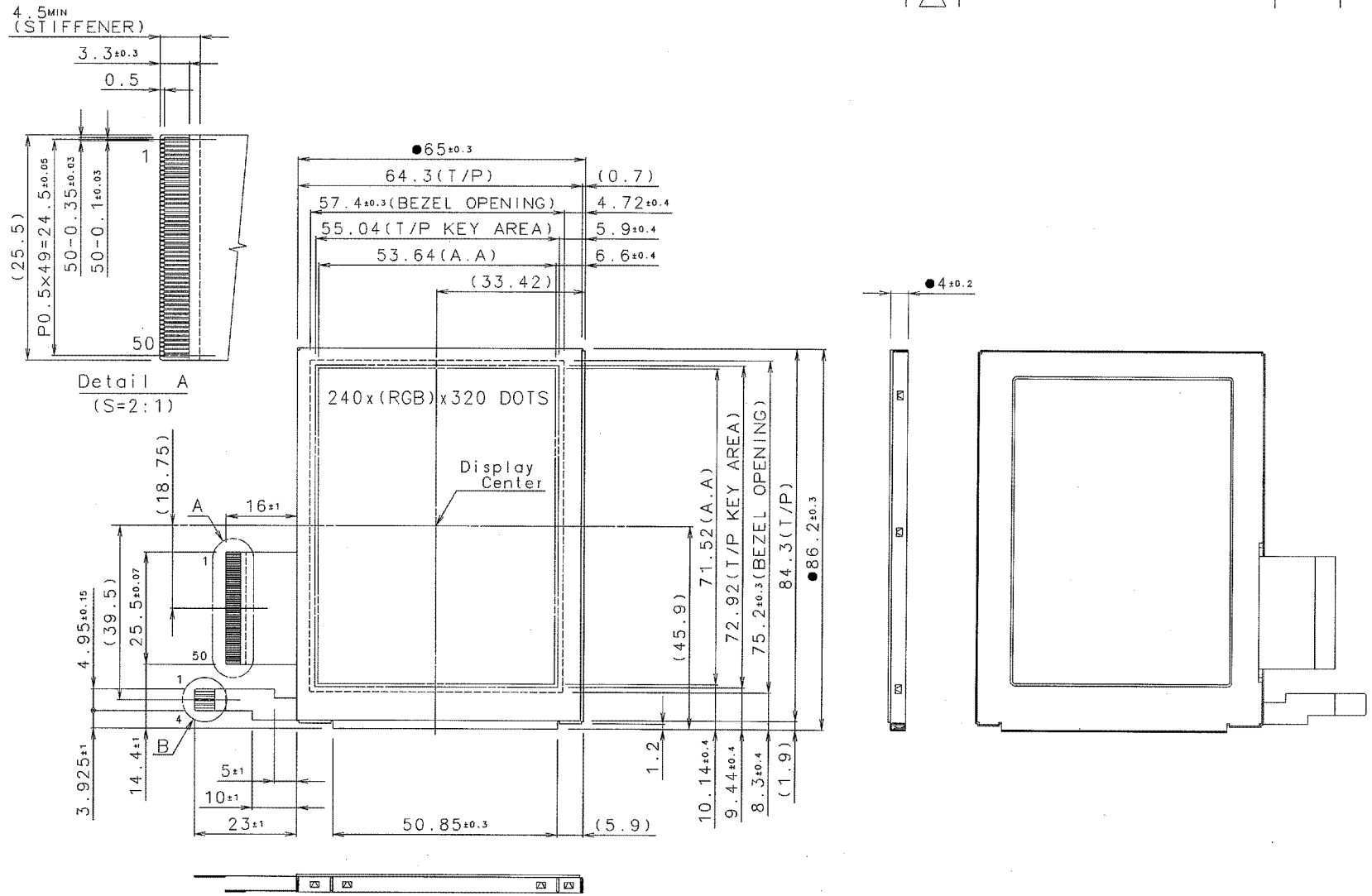

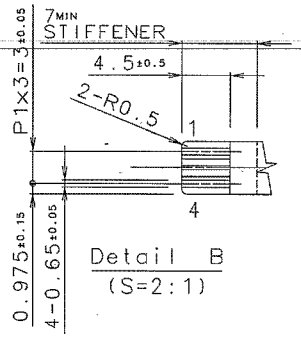

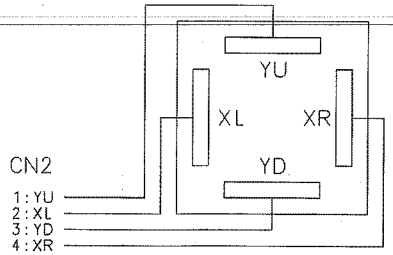

Touch panel circuit

NOTES
1. THE dimensions with the mark(●) are controled as a particular characteristic.

TOLERANCE			
MEASURE	A	B	C
L≤16	±0.1	±0.3	±1
16<L≤63	±0.2	±0.5	±1.5
63<L≤250	±0.3	±0.8	±2
250<L≤500	±0.5	±1.2	±3
500<L	±0.8	±2	±4
ANGLE	±1°	±5°	±10°

MATERTAL:		FINISH:	
DATE 2005/06/21	THIRD ANGLE PROJECTION	OPTREX CORPORATION	
APPROVED toshiyuki okamoto	SCALE 1:1	UNIT mm	TITLE DIMENSIONAL OUTLINE
CHECKED yasuo yamaguchi	DATE JUN.20'05		DWG NO(CODE) T-51963AC base
DRAWN yasushi kimura	DSGN Y.Kimura	DWG SIZE A3	DWG REV